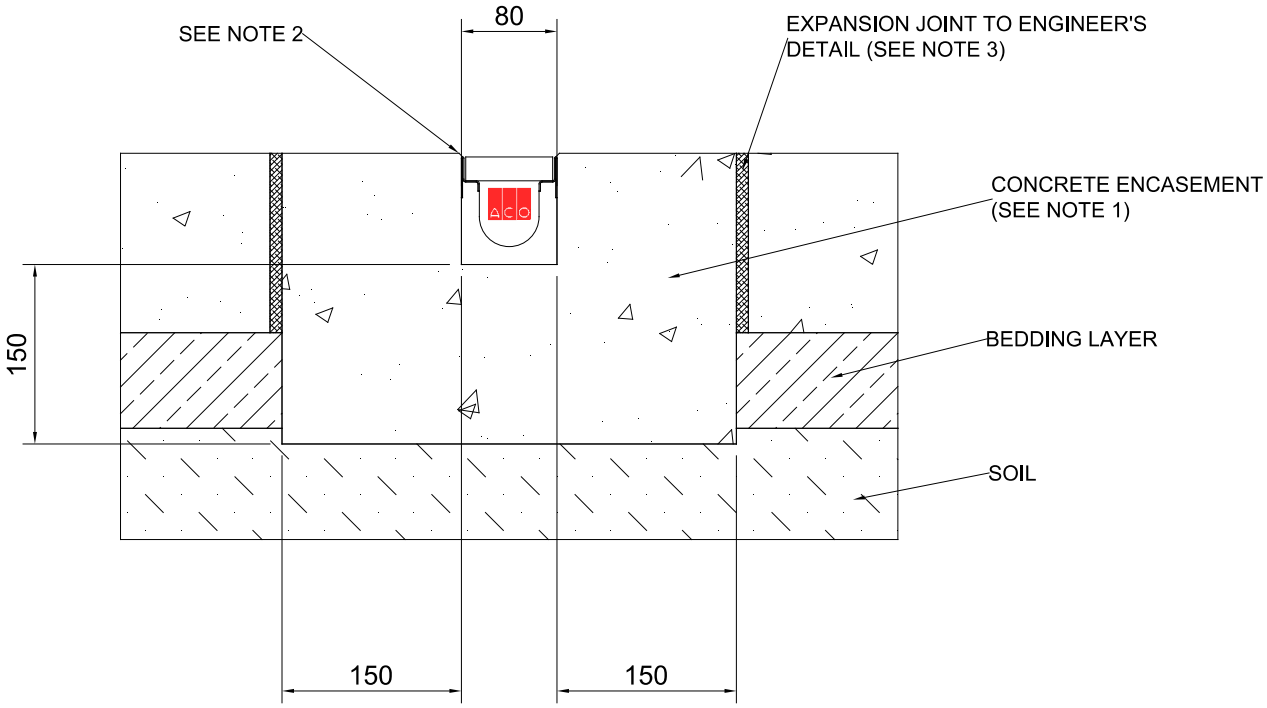

NOTES:
1. Specific site conditions may require an increase in concrete encasement dimensions and/or reinforcement. It is the customer's responsibility to ensure the concrete encasement is designed for the application. A minimum concrete strength of 25MPa is recommended. The concrete should be vibrated to eliminate air pockets. *Engineering advice may be required.*
2. The finished level of the concrete encasement must be approximately 3mm above the top of the channel edge.
3. Expansion and crack control joints are recommended to protect the channel and the concrete encasement. *Engineering advice may be required.*
4. For further details, refer to ACO's design & site installation files at www.acodrain.com.au/resources.

SPECIFICATION CLAUSE
MINIKLASSIK K50 - LOAD CLASS C-D

GENERAL
THE SURFACE DRAINAGE SYSTEM SHALL BE ACO'S MINIKLASSIK K50 POLYMER CONCRETE MINI CHANNEL SYSTEM WITH GALVANISED STEEL EDGE RAILS AS MANUFACTURED BY ACO.

MATERIALS
K50 CHANNELS SHALL BE MANUFACTURED FROM POLYESTER RESIN POLYMER CONCRETE WITH INTEGRALLY CAST-IN GALVANISED STEEL EDGE RAILS. PROPERTIES OF POLYMER CONCRETE WILL BE AS FOLLOWS WITH SUPPORTING DOCUMENTATION:

COMPRESSIVE STRENGTH:	**98 MPa**
FLEXURAL STRENGTH:	**26 MPa**
TENSILE STRENGTH:	**14 MPa**
WATER ABSORPTION:	**0.07%**
FROST PROOF:	**YES**
COEFFICIENT OF EXPANSION/CONTRACTION:	**2.02×10^{-5}/°C**
WATER VAPOUR TRANSMISSION:	**0.0364g/m²**
NON FLAMMABLE:	**YES**
COEFFICIENT OF ROUGHNESS (MANNINGS):	**n=0.011**
RESISTANT TO WEATHERING:	**YES**
DILUTE ACID AND ALKALI RESISTANT:	**YES**
SF SEALANT GROOVE	**YES**

CHANNELS
K50 CHANNEL SHALL BE 50mm NOMINAL INTERNAL WIDTH WITH AN OVERALL WIDTH OF 80mm. CHANNELS SHALL HAVE AN OVERALL DEPTH OF 89mm FOR USE IN COMPACT AREAS. ALL CHANNELS SHALL BE INTERLOCKING WITH A MALE/FEMALE JOINT.

GRATES
INSERT SPECIFICATION FOR THE SELECTED GRATE. REFER TO THE RELEVANT ACO SPECIFICATION INFORMATION SHEET, CLICK www.acodrain.com.au/resources.

INSTALLATION
THE COMPLETE DRAINAGE SYSTEM SHALL BE BY ACO AND TO BE INSTALLED FOR ITS INTENDED PURPOSE. ANY DEVIATION OR PARTIAL USE OF THE SPECIFIED SYSTEM AND/OR IMPROPER INSTALLATION WILL VOID ALL WARRANTIES PROVIDED BY ACO.

K50-CD-C

K50 - MINIKLASSIK - LOAD CLASS: C-D
FOR CONCRETE SLAB

DATE: 01/24

INSTALLATION DRAWING - ACO DRAIN

ACO Pty Ltd
Australia
Ph: 1300 765 226
www.acodrain.com.au